BYGGING
Infrastructure Pvt. Ltd.
SINCE 1983

Lift & Weld System

Statistics show that around 15% of all industrial accidents are related to working at height and almost a third of these are caused by a fall of over 2.5m in height.

Any Technology that can Minimise these Risks is Surely Worth Considering.

Tank Storage Magazine - January 2012

Index

BYGGING
Infrastructure Pvt. Ltd.
SINCE 1983

Innovation has been the key at Bygging throughout its 30 year presence. Bygging strives to deliver world class solutions to storage tank builders across the globe. With the introduction of the "Lift n weld" system, we have added SAW automatic horizontal welding solutions for both external and internal tank peripheries to our basket of tank lifting products. Our mission is to help our customers build tanks FASTER, SAFER and make LARGER PROFITS.

Lift & Weld Process

Lift & Weld System

Working Principle

STEP-1

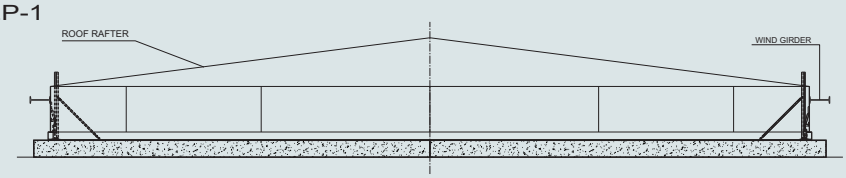

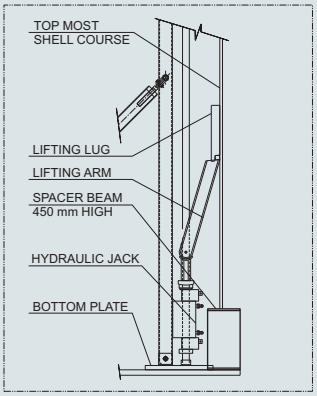

1. Annular plates and bottom plates are laid out and welded.
2. Spacer beams (400 to 500 mm height) are placed on the annular plate at a spacing of 2000 mm around the periphery of the tank shell. Spacer beams have guide cleats welded onto them.
3. Top-most shell course (or top two shell courses) are erected on the spacer beams and fixed roof construction is completed leaving 3 or 4 plates open in the roof for air to vent through the roof.
4. Jacking equipment is installed inside the tank.

STEP-2

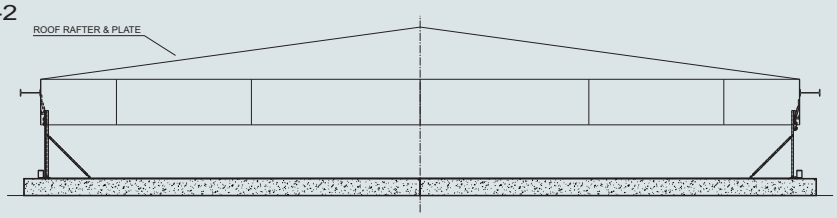

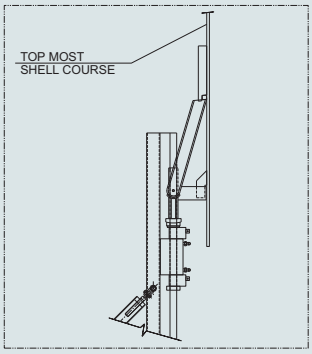

5. Constructed part of tank is lifted up to a height required for the next shell course to be placed on spacer beams.

STEP-3

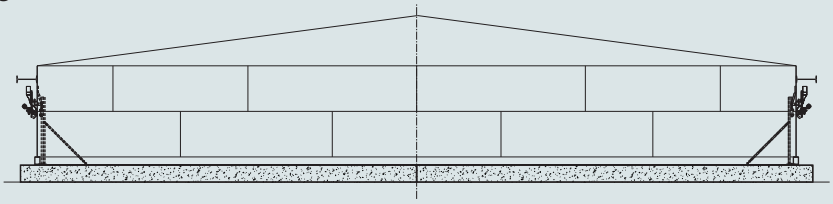

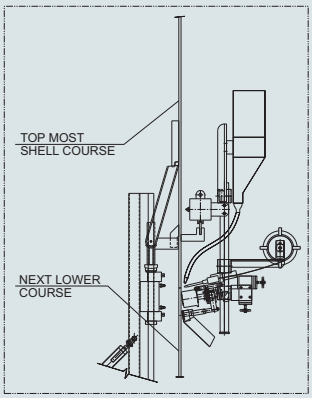

6. Plates of the next shell course are erected on spacer beams and vertical welds are completed. Lifted part of the tank is lowered down slightly to sit on the newly erected shell course, after which horizontal welding on external face is completed using Bygging Automatic Girth Welding machine.

STEP-4

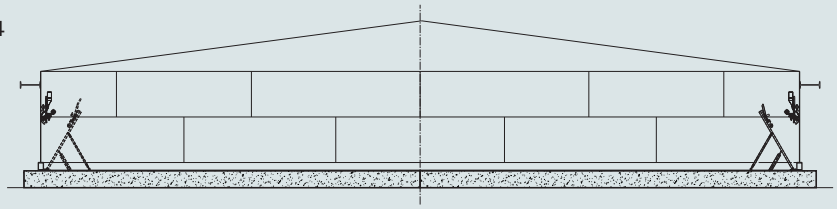

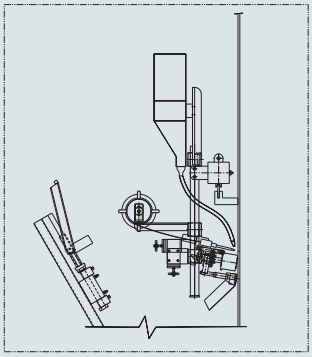

7. Once horizontal welds are completed, the tank weight can be released from the jacks. Lifting and fend off lugs are cut off.
8. Control valve is opened to direct oil flow from powerpack to the retraction mechanism and shut-off oil flow to the lifting jacks.
9. With the press of a lever, all jacks retract away from the tank shell creating space between the inside face of tank shell and jack trestles, to allow the use of Bygging SAW Single side AGW for internal welds.
10. Bygging SAW Single side AGW is mounted on the inside periphery of tank and internal welds are completed.

STEP-5

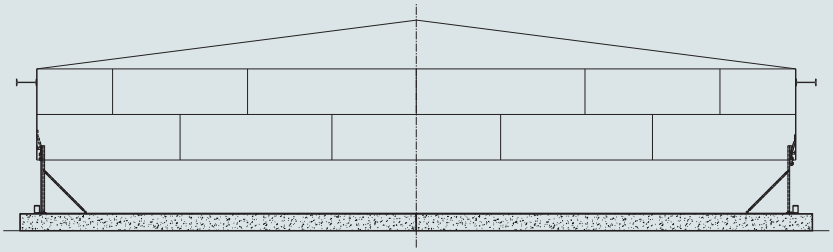

11. After internal welds are completed, the AGW is dismounted and the trestles are brought back hydraulically all at once to their original vertical position, ready to lift the next shell course.

Retractable Jacks

Retractable Jacks

Once the tank is lifted using our jacking equipment, and a new course (shell ring) is placed, vertical welds are completed either manually or using an automatic FCAW welding machine. Thereafter external horizontal welds are done using our SAW single side Automatic Girth Welding machine (Root weld can be done either manually or using our Automatic Girth Welding machine with the additional use of a ceramic backing strip).

After external welding, the tank load is released from jacks, lifting lugs and fend-off lugs are cut-off, and with the push of the operating lever on the same powerpack (which is used for lifting jacks), all trestles retract away from the tank shell, to allow for space for the use of the Bygging SAW single side AGW for internal welds.

This allows optimum utilization of the AGW and considerably reduces the need to employ manual welders, which would otherwise be required for internal welds.

Once internal horizontal weld is completed, the jack trestles are moved back hydraulically all at once to their original vertical position, ready to lift the next shell course

(Patent applied)

TRESTLE IN RETRACTED POSITION
INTERNAL WELDING IN PROGRESS

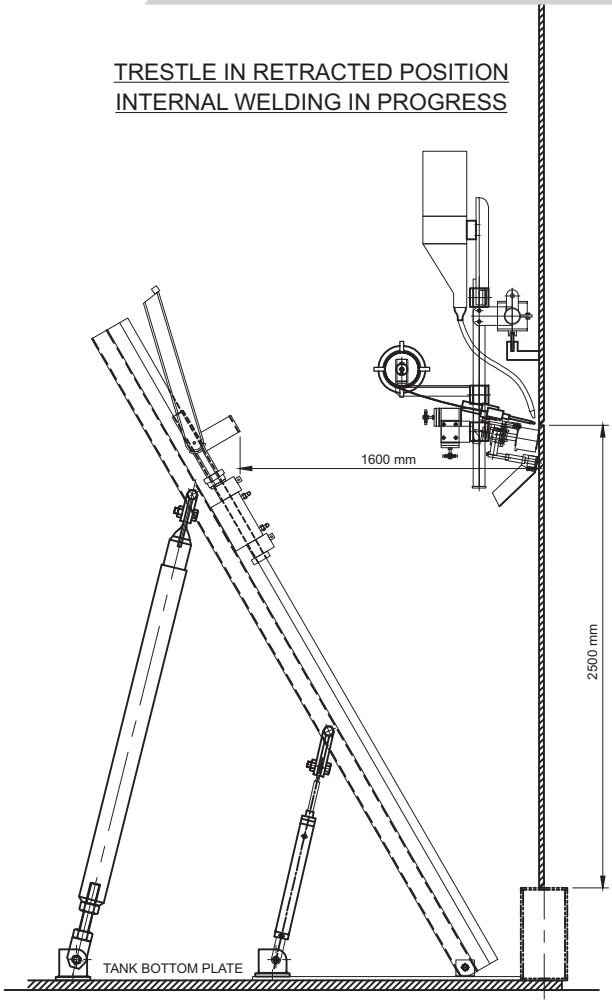

Type of Jack & Girth Welding Machine	Fast Lifting (40 minutes to lift up 2.5 mtr height)	External welding using Automatic Girth Welding Machine	Internal welding using Automatic Girth Welding Machine
Single Acting Jacks	✗	✗	✗
Double Acting Jacks	✓	✗	✗
Double Acting Jacks + Automatic Single Sided Girth Welding Machine	✓	✓	✗
Double Acting Jacks Retractable Type + Automatic Single Sided Girth Welding Machine	✓	✓	✓

Automatic Girth Welding Machine (AGW)

Technical Specification:

Welding plate width	: For first / top shell - **Min. 800mm** For subsequent shells - **No restriction.**
Tank diameter	: Suitable for tanks more than 8 mtr in diameter.
Welding current	: From 250 Amps Upto 1000 Amps at 100% duty cycle.
Output Voltage	: 44V
Welding Speed	: 250 mm to 700 mm/min
Idle Travel Speed	: Upto 1000 mm per minute.
Wire diameter	: 2.4 / 3.2 mm / 4 mm
Weight of Welding head	: 216 kgs (approx.) without flux & wire spool.

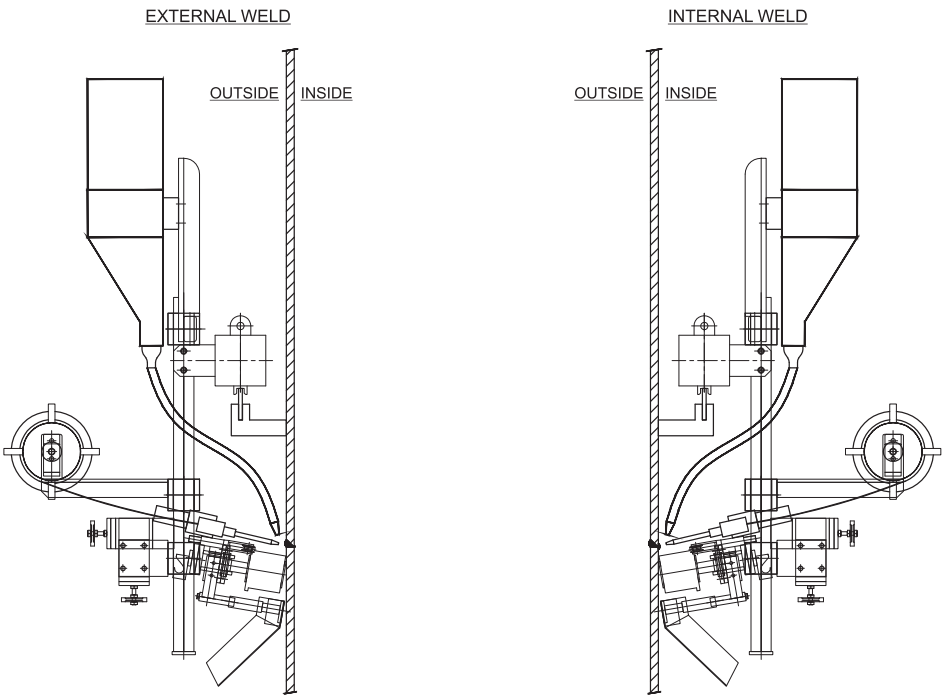

Salient Features:

Bygging SAW AUTOMATIC GIRTH WELDER (AGW) for

SINGLE SIDE WELDING

Suitable for horizontal welding of storage tanks built using jacking system:

- Make of Power Source - Lincoln Electric, USA.
- Make of Wire Feeder - Lincoln Electric, USA.
- Weatherproof Electrical cabinet.
- Robust DC motor for tractor movement.
- Auto flux recovery unit.
- Fine adjustable manual cross slide for vertical & horizontal adjustment.
- Weld head slide assembly.
- Auto sensor for wire feeder speed.
- Flux stored in Flux Recovery Unit as well as in Flux discharge hopper.
- View glass in flux hopper & in Flux Recovery Unit
- Same Power Source can be used for root welds and for FCAW / MIG / SMAW vertical welds.
- Two or more FCAW / MIG / SMAW welding heads can be used using one Power Source (by using Multiweld 350) which increases vertical welding productivity by more than double.
- Same mechanism can be used for Arc gouging.
- Ambient temperature range at which the machine can work : -5 to + 65 deg C.
- Machine is compact, light weight & can be handled without the need for a large crane.
- Root welding with backing strip possible.
- Bygging AGW's output is equivalent to 6 welders.

Comparison

Conventional Method | **Plain Vanilla Jacking**

Comparision Between Conventional Method, Plain Vanilla Jacking Method and

Parameter	Conventional Method With Manual Welding	Conventional Method With Automatic Welding
Method of erection	Bottom to top	
Crainage cost (cost of crane rental including fuel)	30 to 40 ton capacity with 30 mtr boom: us $24,500 per month 70 ton capacity with 40 mtr boom: us $50,000 per month	
Scaffolding	Required for providing access to manpower for alignment of plates, welding, painting of underside of roof	
Safety of workmen	High risk of accidents from workmen falling from heights	
Fixed roof construction	Roof to be erected at height	
Safety of tank shell during erection	Since the tank is without a wind girder until top-most shell is erected, tank shell is subject to stresses due to high winds during erection phase	
Evacuation of personnel in case of emergency	In case of an emergency during construction, evacuation of workmen working at heights is time consuming and difficult	
Incidence of weld repair	High	Low
Wastage of electrode butts	High	Nil
Cost of welding & grinding consumable	High	Low

Analysis of manpower and time required to erect tank shells of various sizes under

		Welding Method								Jacking Method of Erection		Conventional Erection Method		
Tank Diameter (meters)	Shell Thickness (mm)			No. Of Weld Passes	Welding Speed Per Machine / Per Welder (mtrs/ Min)	No. of Auto Welding Machines / No. Of Manual Welders	Working Hrs Per Days	Total Days Required For Horizontal Welding	No. Of Welders And Helpers Required For Welding	Days For Placing And Erecting Shell Plates, Aligning And Vertical Welding	No. Of Fitters / Riggers And Other Helpers Required	Days For Placing And Erecting Shell Plates, Aligning And Vertical Welding	No. Of Fitters / Riggers And Other Helpers Required	
20	10	Mechanised Welding	External	4	0.333	1	10	1.26	4	2	16	4	24	Total days for 1 (one) shell course
			Internal	3		1		0.94						Total manpower required
		Manual Welding	External	4	0.045	4		2.33	10					Total days to erect 6 shell course
			Internal	3		4		1.75						Total man days for shell
30	16	Mechanised Welding	External	5	0.333	2	10	1.18	4	2	21	4	28	Total days for 1 (one) shell course
			Internal	3		2		0.71						Total manpower required
		Manual Welding	External	5	0.045	5		3.49	12					Total days to erect 6 shell course
			Internal	3		5		2.09						Total man days for shell
50	20	Mechanised Welding	External	5	0.333	3	10	1.31	6	5	28	8	37	Total days for 1 (one) shell course
			Internal	4		3		1.05						Total manpower required
		Manual Welding	External	5	0.045	6		4.85	15					Total days to erect 6 shell course
			Internal	4		6		3.88						Total man days for shell
80	24	Mechanised Welding	External	7	0.333	5	10	1.76	12	8	40	11	54	Total days for 1 (one) shell course
			Internal	5		5		1.26						Total manpower required
		Manual Welding	External	7	0.045	12		5.43	27					Total days to erect 6 shell course
			Internal	5		12		3.88						Total man days for shell

Notes: (A) Actual working days considered without holidays (B) Data on number of workmen and required working days are acquired from actual job sites and may vary from one job site to another

Lift n Weld

Bygging "Lift n Weld" (Jacking + Automatic Welding) both external & internal

Plain Vanilla Jacking Method With Manual Welding	Jacking Method With External Welds Using Automatic Machine	Lift N Weld
Top down method (or top to bottom)		Top down method and using automatic girth welding machine for external and internal horizontal welds
One small 10 ton capacity crane with 8 mtrs boom length required for handling of shell plates: us $2,000 per month		
Not required above 4 mtr level		
Zero risk of workmen falling from heights		
Roof erected at ground level, leading to saving in erection time of roof by 30%		
Top most shell ring and wind girder are erected at first, and therefore tank shell is Stable against high winds during erection		
Evacuation is quick and easy since workmen are working at a maximum of 3 mtr height		
High	Medium	Low
High	Medium	Nil
High	Medium	Low

different erection methods

Conventional + Manual Welding	Conventional + Automatic Welding	Plain Vanilla Jacking + Manual Welding	Jacking + External Welds by Auto Welding + Internal Welds manually	'LIFT n WELD' (Jacking + Auto Welding for both External and Internal Welds)	% Reduction Compared to manual Welding(C-E)	% Reduction in man days compared to conventional method (B-E)	
A	B	C	D	E	(C-E)	(B-E)	
8.07	6.20	6.07	5.00	4.20			
34.00	28.00	26.00	21.00	20.00	23.08	28.57	Lesser workmen required
48.44	37.21	36.44	30.02	25.21	30.81	32.25	Lesser time for shell erection
1,646.88	1,041.87	947.38	630.46	504.19	46.78	51.61	
9.59	5.89	7.59	5.27	3.89			
40.00	32.00	33.00	27.00	25.00	24.24	21.88	Lesser workmen required
57.51	35.32	45.51	31.64	23.32	48.76	33.97	Lesser time for shell erection
2,300.59	1,130.32	1,501.98	854.40	583.06	61.18	48.42	
16.73	10.36	13.73	10.19	7.36			
52.00	43.00	43.00	35.50	34.00	20.93	20.93	Lesser workmen required
100.37	62.15	82.37	61.14	44.15	46.39	28.96	Lesser time for shell erection
5,219.07	2,672.59	3,541.77	2,170.36	1,501.21	57.61	43.83	
20.31	14.02	17.31	13.64	11.02			
81.00	66.00	67.00	53.50	52.00	22.39	21.21	Lesser workmen required
121.86	84.12	103.86	81.84	66.12	36.34	21.40	Lesser time for shell erection
9,870.48	5,551.66	6,958.47	4,378.53	3,438.03	50.59	38.07	

Jack Models

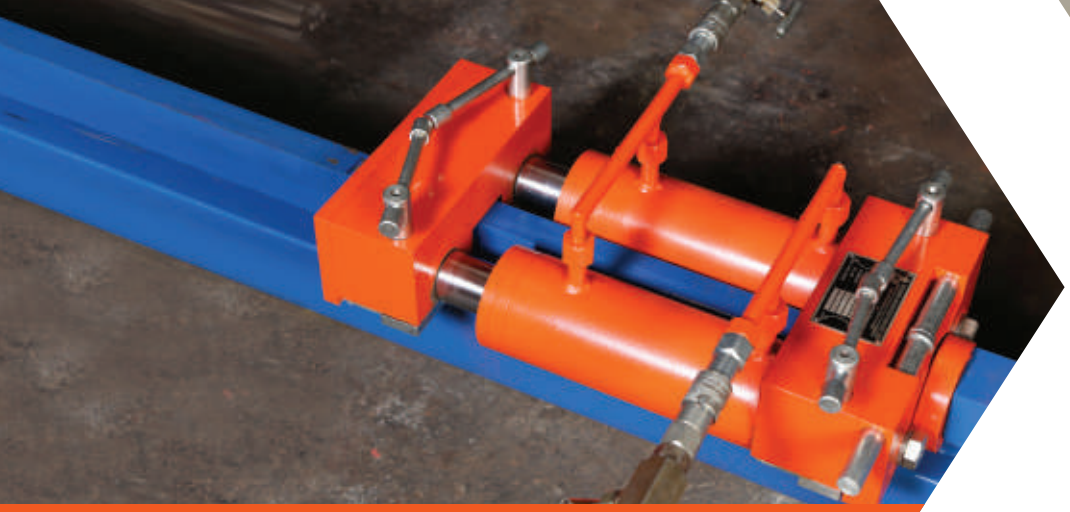

Double Acting Jack

Single Acting Jack

The time for lifting tank upto 2.5 meters height is as follows:

- Using double acting jacks - 40 minutes
- Using single acting jacks - 3-4 hours

Double Acting Jacks work 5 Times Faster than Single Acting Jacks

Jack models in terms of lifting capacity

Model / Description	510-35D	2510-35D	2510-40D	2510-50D
Working capacity (metric tons)	12	12	18	25
Testing load (metric tons)	18	18	27	37.5
Standard arc distance between jacks (m)	2 to 3.5			
Max plate height for which jacking equipment can be supplied (m)	2.5 or 3.0 or more			
Min plate height that can be used (m)	0.80			
Min safe bearing capacity below trestle base plate (N/mm²)	1.45			
Plate thickness range (mm)	5 and above		6 and above	
Unitary climb (cm/stroke)	10			
Time per stroke (minutes)	Approx 5	1 to 1.5		
Working pressure (kg/cm²)	120		142	135
Piston retracting system	Spring	hydraulic		
Trestle retractable system to allow internal welds using automatic welding machine	No	No	No	No

Jack models in terms of variants

Model Code (also order example) 2510-35D S H R

2510-35D = Double Acting Jack 12 ton capacity
2510-40D = Double Acting Jack 18 ton capacity
2510-50D = Double Acting Jack 25 ton capacity

Maximum height of shell course
S = 2.5 mtrs
B = 3.0 mtrs

Type of contact with shell plate
H = Lifting hook: no welding of lifting cleats to tank shell.
L = Lifting arm: cleats to be welded to tank shell.

R = Retractable system: enables internal welding using automatic welding machine.

Example: 2510-35D-B-H-R: Double acting jack 12 ton capacity suitable for 3 mtr width shell plate with lifting hook and with retractable arrangement.

Jacks that don't need any welding to tank
Jack Model: 2510-35D-S-H
Lifting Hook: No welding of cleats to tank shell

Range of Services

Bygging offers complete solutions for any storage tank project - be it erecting a 100m diameter floating roof tank, or lifting a 75m diameter LNG tank for foam glass replacement, or lifting a 1900 ton blast furnace gas holder, all backed by engineering support. Our products and services range right from supply of jacks and welding machines and experienced technicians up to providing stability calculations, method statements and job hazard analysis.

Sales and Rental of hydraulic jacking equipment and single sided automatic girth welding equipment

Tank construction companies can either purchase or rent jacks and auto welding machines from Bygging which takes care of tank lifting and horizontal welding which is a major portion of the tank construction process.

Deputation of tank jacking and auto welding specialists

Specialists with vast experience in tank projects are deputed by Bygging to job sites the world over. Besides doing the mundane jobs like tank lifting and horizontal welding, these specialists offer useful site tips to tank builders from the experience they have gathered from working at various geographical locales.

Re-bottoming of tanks

Bygging carries out site survey, submits jacking layout for placing jacks on the outside of tanks and stability calculations that are essential for any tank repair project.

Retrofitting pre sold jacking equipment to make them retractable

Bygging has sold more than 26,000 jacking units world wide. Existing customers can get their equipment retrofitted to make them retractable which allows the use of auto welding machine for internal welding as well.

Jacks for

other Lifting Applications

Hydraulic jacks for erecting grain storage silos, dryers and bolted Tanks

Bygging manufactures and rents hydraulic telescopic jacks of 5.5 and 6.8 ton capacity suitable to lift two shell rings of grain storage silos so that lifting brackets have to be removed after fixing two rings. These jacks are quickly replacing the traditional A-frames with chain blocks in the erection of grain storage silos.
Jacks of 9 ton capacity with synchronized lifting mechanism are manufactured to lift dryers.

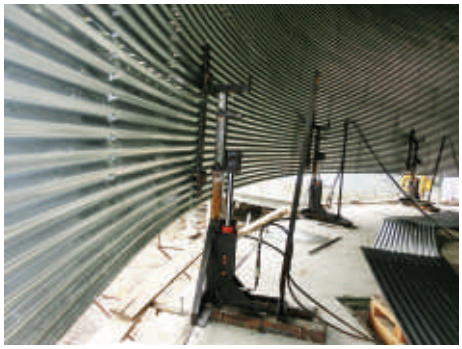

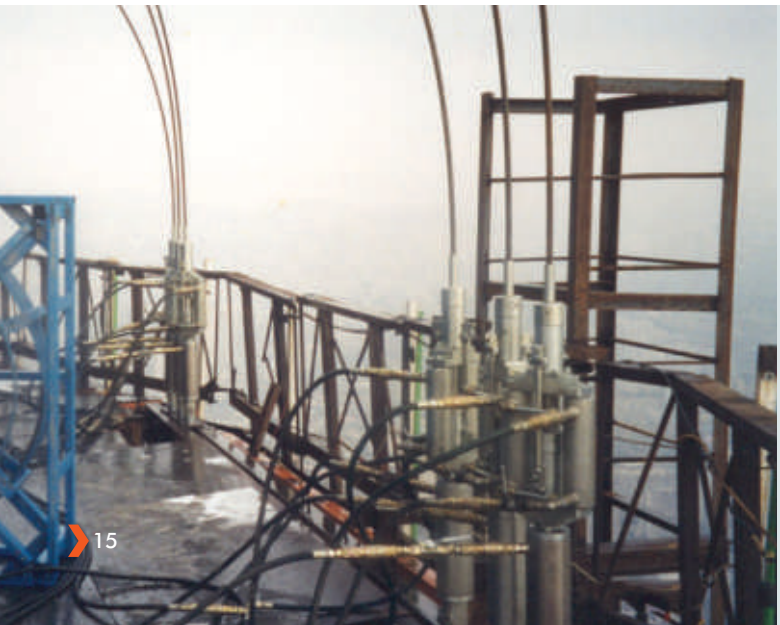

Strand Jacks

Single strand jacks up to 25 ton capacity using 18mm diameter H.T. strands are manufactured by Bygging. These jacks find use in lifting of steel flues for chimneys, and to lift horizontal tanks, vessels and de-aerators. Multistrand jacks upto 180 ton lifting capacity are used for boiler drum lifts.

Quality Control

Ultrasonic Testing

Jack Load Testing

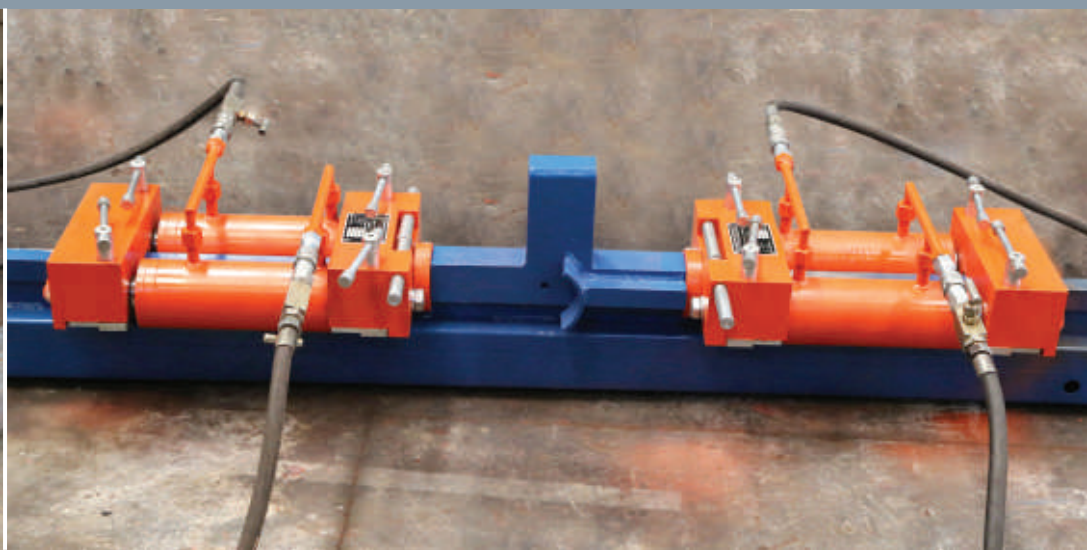

In order to deliver a world class quality product, strict quality control measures are adhered to and extensive checks and tests are conducted at various stages of the manufacturing process.

- **Raw materials** for critical components are sourced directly from reputed manufacturers. Only high quality raw material from time tested and proven manufacturers is used.
- **Dimensional checks** of components are carried out after they are machined.
- **Testing** : The final products are rigorously tested to ensure trouble free operation on the job site which means higher productivity for our customers.

World class infrastructure with well equipped

Manufacturing Facility

5750 tanks constructed using Bygging Jacks in 55 countries, in more than 320 locations

Bygging Jacking System approved by and used at

Shell · TOTAL · ExxonMobil · Chevron · PERTAMINA · bp · Saudi Aramco · KNPC · ORYX PETROLEUM

QAFCO · Qatar Petroleum · Petroleum Development Oman · Vopak · QUEENSLAND ALUMINA · Oiltanking

TANKMED · Bharat Petroleum · CAIRN · ENOC · ESSAR · GASCO · GPSCHEMOIL

IndianOil · LAICA · ONGC · Reliance · vedanta · whessoe · Gulf Petrochem · vtti

BYGGING
Infrastructure Pvt. Ltd.
SINCE 1983

Office:
India
BYGGING Infrastructure Pvt. Ltd.
69, RNA Arcade,
Lokhandwala Complex,
Andheri (W), Mumbai - 400 053
+91 22 26364241 / 26368756,
info@bygging.com

Workshop
R-570 & R-571,
TTC Industrial Area,
MIDC Rabale,
Navi Mumbai -400 701